Cambridge International AS & A Level

**Cambridge International Examinations**
Cambridge International Advanced Subsidiary and Advanced Level

CANDIDATE NAME

CENTRE NUMBER

CANDIDATE NUMBER

*1349291603*

**PHYSICS** **9702/33**

Paper 3 Advanced Practical Skills 1 **May/June 2014**

**2 hours**

Candidates answer on the Question Paper.

Additional Materials: As listed in the Confidential Instructions.

**READ THESE INSTRUCTIONS FIRST**

Write your Centre number, candidate number and name on all the work you hand in.
Write in dark blue or black pen.
You may use an HB pencil for any diagrams or graphs.
Do not use staples, paper clips, glue or correction fluid.
DO **NOT** WRITE IN ANY BARCODES.

Answer **both** questions.
You will be allowed to work with the apparatus for a maximum of one hour for each question.
You are expected to record all your observations as soon as these observations are made, and to plan the presentation of the records so that it is not necessary to make a fair copy of them.
You are reminded of the need for good English and clear presentation in your answers.

Electronic calculators may be used.
You may lose marks if you do not show your working or if you do not use appropriate units.

Additional answer paper and graph paper should be used only if it becomes necessary to do so.

At the end of the examination, fasten all your work securely together.
The number of marks is given in brackets [ ] at the end of each question or part question.

| For Examiner's Use | |
|---|---|
| 1 | |
| 2 | |
| Total | |

This document consists of **10** printed pages and **2** blank pages.


© UCLES 2014

CAMBRIDGE International Examinations

**BLANK PAGE**

**You may not need to use all of the materials provided.**

**1** In this experiment, you will investigate how the current in a circuit varies as the resistance of the circuit is changed.

**(a)** Measure and record the length $L$ of wire between the crocodile clips on the wire labelled F.

$L$ = .....[1]

**(b)** Set up the circuit as shown in Fig. 1.1.

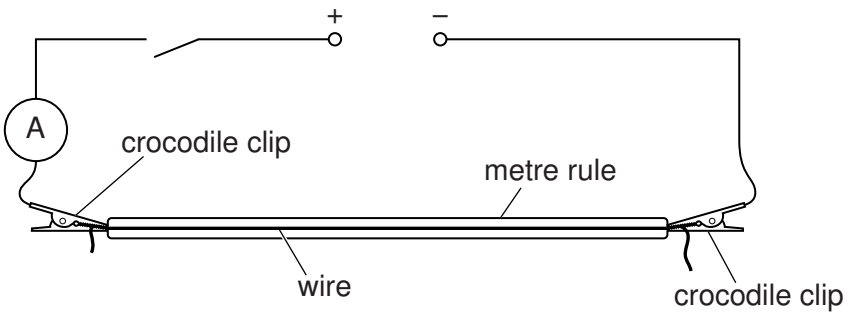


**Fig. 1.1**

**(c) (i)** Attach wire F to the wire on the metre rule as shown in Fig. 1.2.

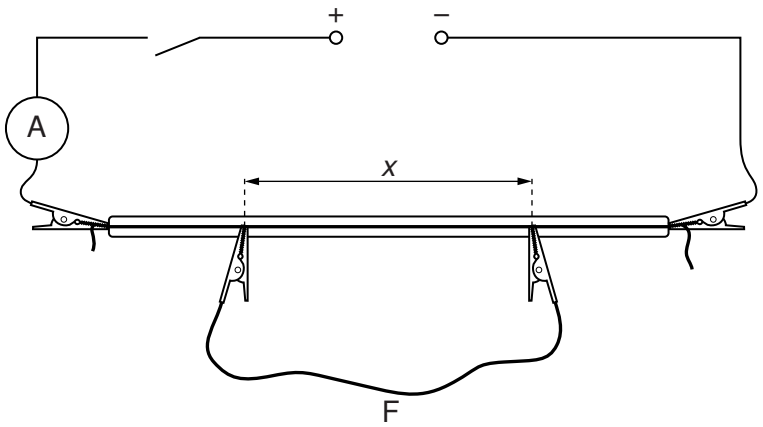


**Fig. 1.2**

The distance $x$ between the crocodile clips should be approximately 50 cm.

**(ii)** Measure and record $x$.

$x$ = .....

**(d) (i)** Close the switch.

**(ii)** Record the ammeter reading $I$.

$I$ = .....[1]

**(iii)** Open the switch.

**(e)** Change $x$ and repeat **(c)(ii)** and **(d)** until you have six sets of readings of $x$ and $I$.

Include values of $\frac{x^2}{(x+L)}$ and $\frac{1}{I}$ in your table.

[10]

**(f) (i)** Plot a graph of $\frac{1}{I}$ on the $y$-axis against $\frac{x^2}{(x+L)}$ on the $x$-axis. [3]

**(ii)** Draw the straight line of best fit. [1]

**(iii)** Determine the gradient and $y$-intercept of this line.

gradient = .....

$y$-intercept = .....

[2]

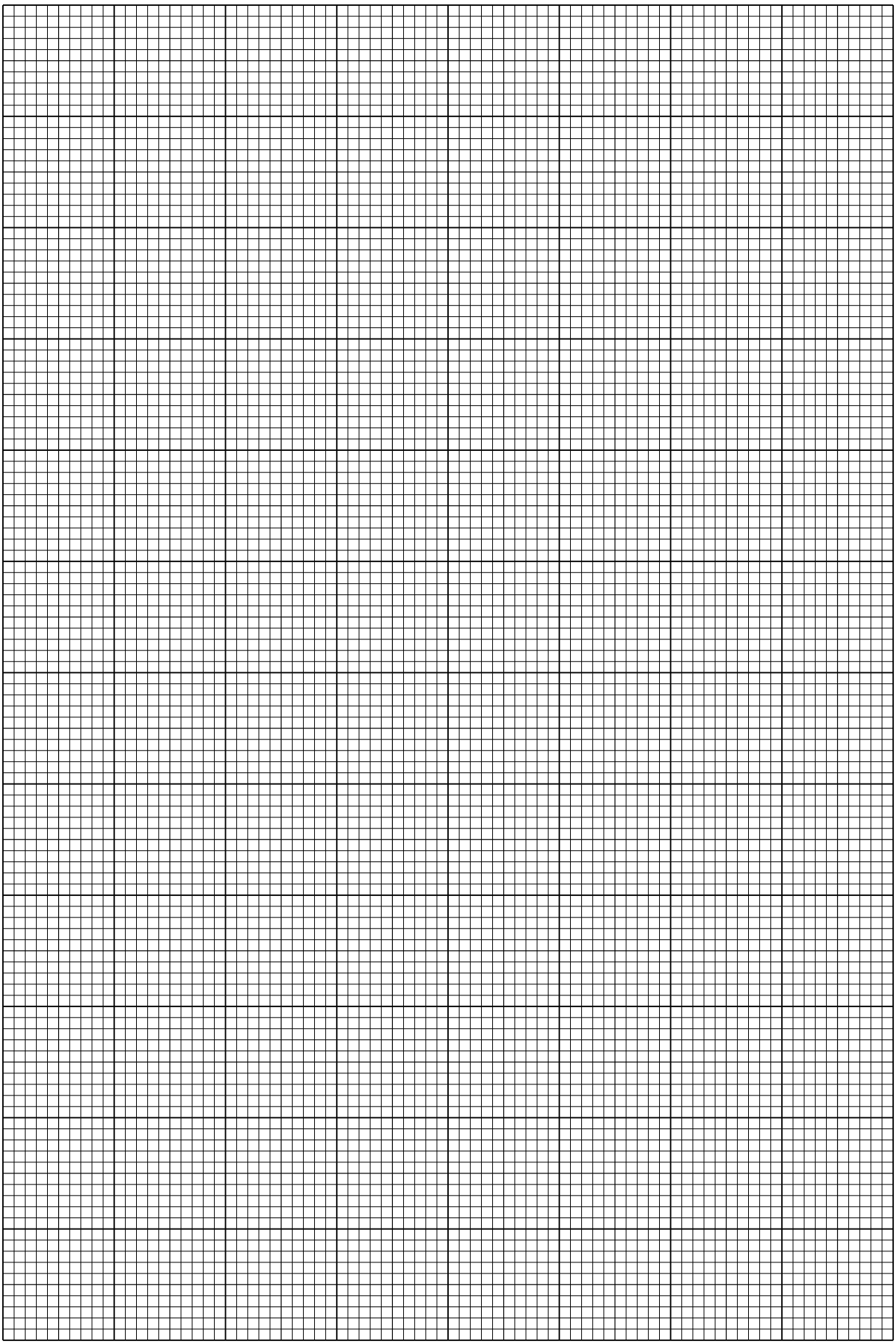

**(g)** The quantities $I$, $x$ and $L$ are related by the equation

$$\frac{1}{I} = -\frac{Px^2}{(x+L)} + Q$$

where $P$ and $Q$ are constants.

Using your answers in **(f)(iii)**, determine values for $P$ and $Q$.
Give appropriate units.

$P =$ .....

$Q =$ .....

[2]

**You may not need to use all of the materials provided.**

**2** In this experiment, you will investigate how the motion of a sphere on a track depends on the radius of the track.

**(a)** Set up the apparatus as shown in Fig. 2.1.

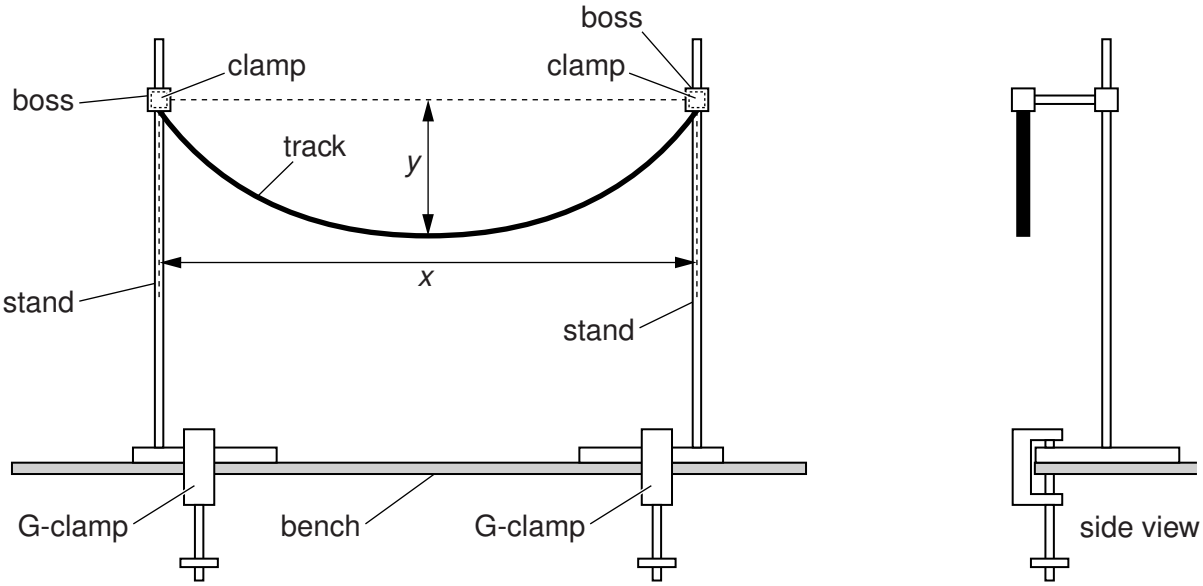


**Fig. 2.1**

The distance *x* is the horizontal distance between the ends of the track.

The distance *y* is the vertical distance between the top and bottom of the track.

The distance *y* should be approximately 10 cm.

**(b)** **(i)** Measure and record the distance *y* as shown in Fig. 2.1.

*y* = .....[1]

**(ii)** Estimate the percentage uncertainty in your value of *y*.

percentage uncertainty = .....[1]

**(iii)** Measure and record the distance $x$ as shown in Fig. 2.1.

$x =$ .....[1]

**(iv)** Calculate the radius $R$ of the track where $R$ is given by

$$R = \frac{x^2}{8y} + \frac{y}{2}.$$

$R =$ .....[1]

**(c) (i)** Place a sphere on the track as shown in Fig. 2.2.

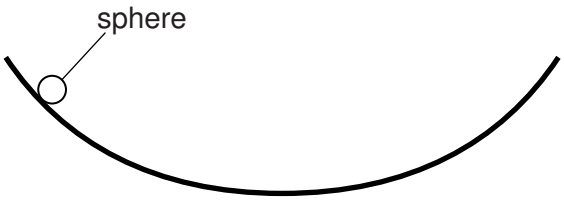


**Fig. 2.2**

**(ii)** Release the sphere and watch the movement.
The sphere will move down one side of the track and up the other side before returning, completing a cycle as shown in Fig. 2.3.

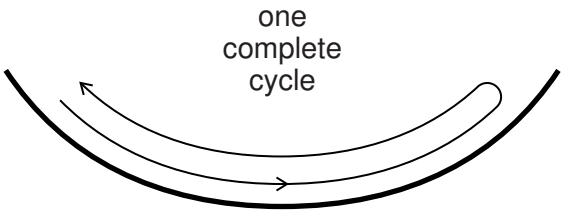


**Fig. 2.3**

© UCLES 2014

**(iii)** The time taken for one complete cycle is $T$.
By timing several of these complete cycles, determine an accurate value for $T$.

$T$ = .....[2]

**(d)** Reduce $x$ by approximately 5 cm and repeat **(b)(i)**, **(b)(iii)**, **(b)(iv)** and **(c)**.

$y$ = .....

$x$ = .....

$R$ = .....

$T$ = .....
[3]

**(e)** It is suggested that the relationship between $T$ and $R$ is

$$T^2 = kR$$

where $k$ is a constant.

**(i)** Using your data, calculate two values of $k$.

first value of $k$ = .....

second value of $k$ = .....

[1]

**(ii)** Justify the number of significant figures that you have given for your values of $k$.

.....

.....

.....[1]

**(iii)** Explain whether your results in **(e)(i)** support the suggested relationship.

.....

.....

.....

.....[1]

**(f)** **(i)** Describe four sources of uncertainty or limitations of the procedure for this experiment.

1. .....

.....

2. .....

.....

3. .....

.....

4. .....

.....

[4]

**(ii)** Describe four improvements that could be made to this experiment. You may suggest the use of other apparatus or different procedures.

1. .....

.....

2. .....

.....

3. .....

.....

4. .....

.....

[4]

**BLANK PAGE**

Permission to reproduce items where third-party owned material protected by copyright is included has been sought and cleared where possible. Every reasonable effort has been made by the publisher (UCLES) to trace copyright holders, but if any items requiring clearance have unwittingly been included, the publisher will be pleased to make amends at the earliest possible opportunity.

Cambridge International Examinations is part of the Cambridge Assessment Group. Cambridge Assessment is the brand name of University of Cambridge Local Examinations Syndicate (UCLES), which is itself a department of the University of Cambridge.

© UCLES 2014